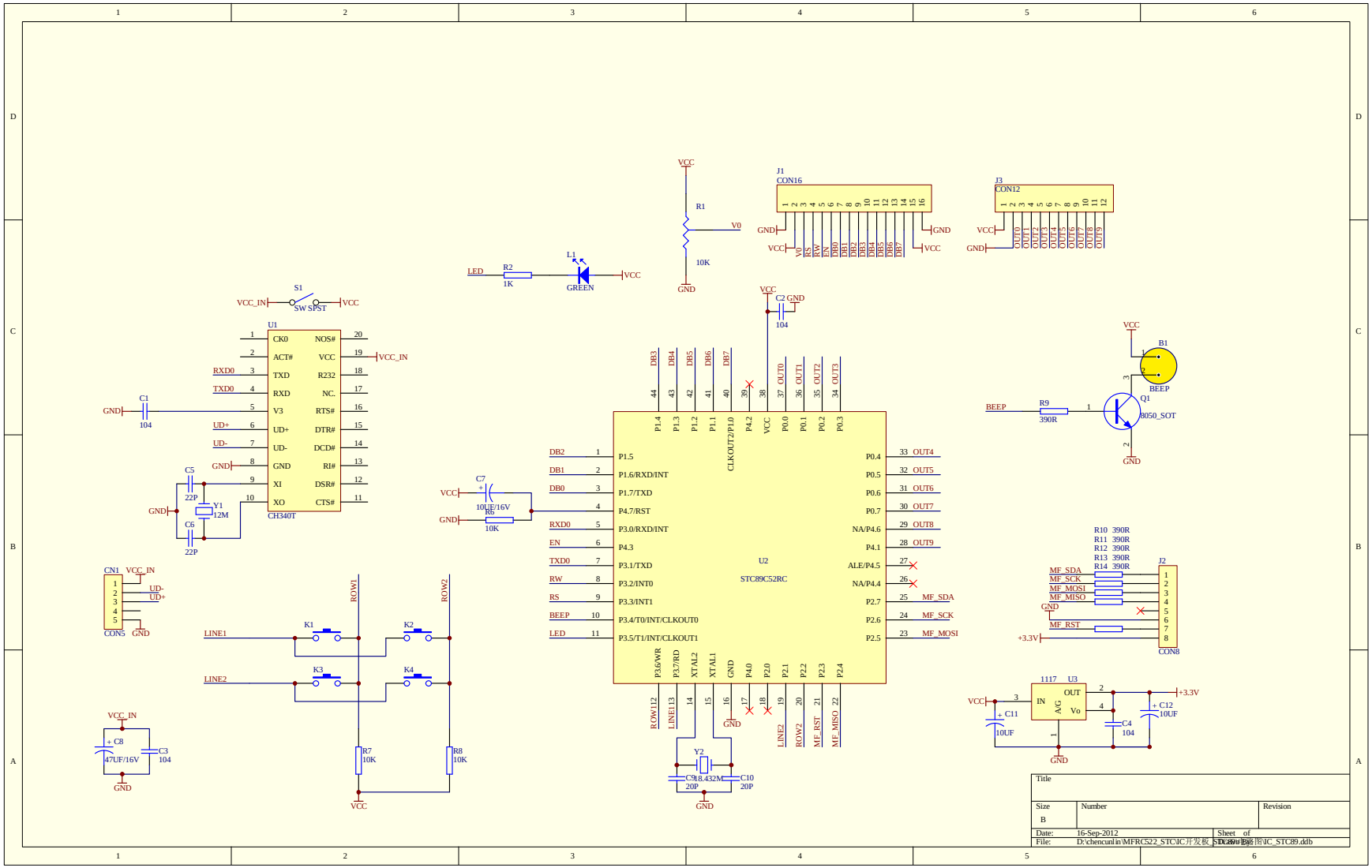
U1
CH340T
CK0
ACT#
TXD
RXD
V3
UD+
UD-
GND
XI
XO
NOS#
VCC
R232
NC.
RTS#
DTR#
DCD#
RI#
DSR#
CTS#
VCC_IN
RXD0
TXD0
C1
104
C5
22P
C6
22P
Y1
12M
S1
SW SPST
CN1
CON5
UD-
UD+
K1
K2
K3
K4
LINE1
LINE2
ROW1
ROW2
R7
10K
R8
10K
C8
47UF/16V
C3
104
R1
10K
V0
R2
1K
LED
L1
GREEN
J1
CON16
J3
CON12
C2
104
C7
10UF/16V
R6
10K
U2
STC89C52RC
P1.5
P1.6/RXD/INT
P1.7/TXD
P4.7/RST
P3.0/RXD/INT
P4.3
P3.1/TXD
P3.2/INT0
P3.3/INT1
P3.4/T0/INT/CLKOUT0
P3.5/T1/INT/CLKOUT1
P3.6/WR
P3.7/RD
XTAL2
XTAL1
P4.0
P2.0
P2.1
P2.2
P2.3
P2.4
P2.5
P2.6
P2.7
ALE/P4.5
NA/P4.4
NA/P4.6
P4.1
P0.4
P0.5
P0.6
P0.7
P0.1
P0.2
P0.3
P4.2
P1.4
P1.3
P1.2
P1.1
CLKOUT2/P1.0
DB2
DB1
DB0
RXD0
EN
TXD0
RW
RS
BEEP
LED
OUT4
OUT5
OUT6
OUT7
OUT8
OUT9
MF_SDA
MF_SCK
MF_MOSI
MF_MISO
MF_RST
ROW1
LINE1
ROW2
LINE2
Y2
11.0592M
C9
20P
C10
20P
B1
BEEP
Q1
9050_SOT
R9
390R
R10 390R
R11 390R
R12 390R
R13 390R
R14 390R
J2
CON8
+3.3V
U3
1117
IN
OUT
A/G
Vo
C11
10UF
C12
10UF
C4
104
Title
Size
B
Number
Revision
Date: 16-Sep-2012
Sheet of
File: D:\chencunlin\MFRC522_STC\IC开发板_STC89\原理图\IC_STC89.ddb