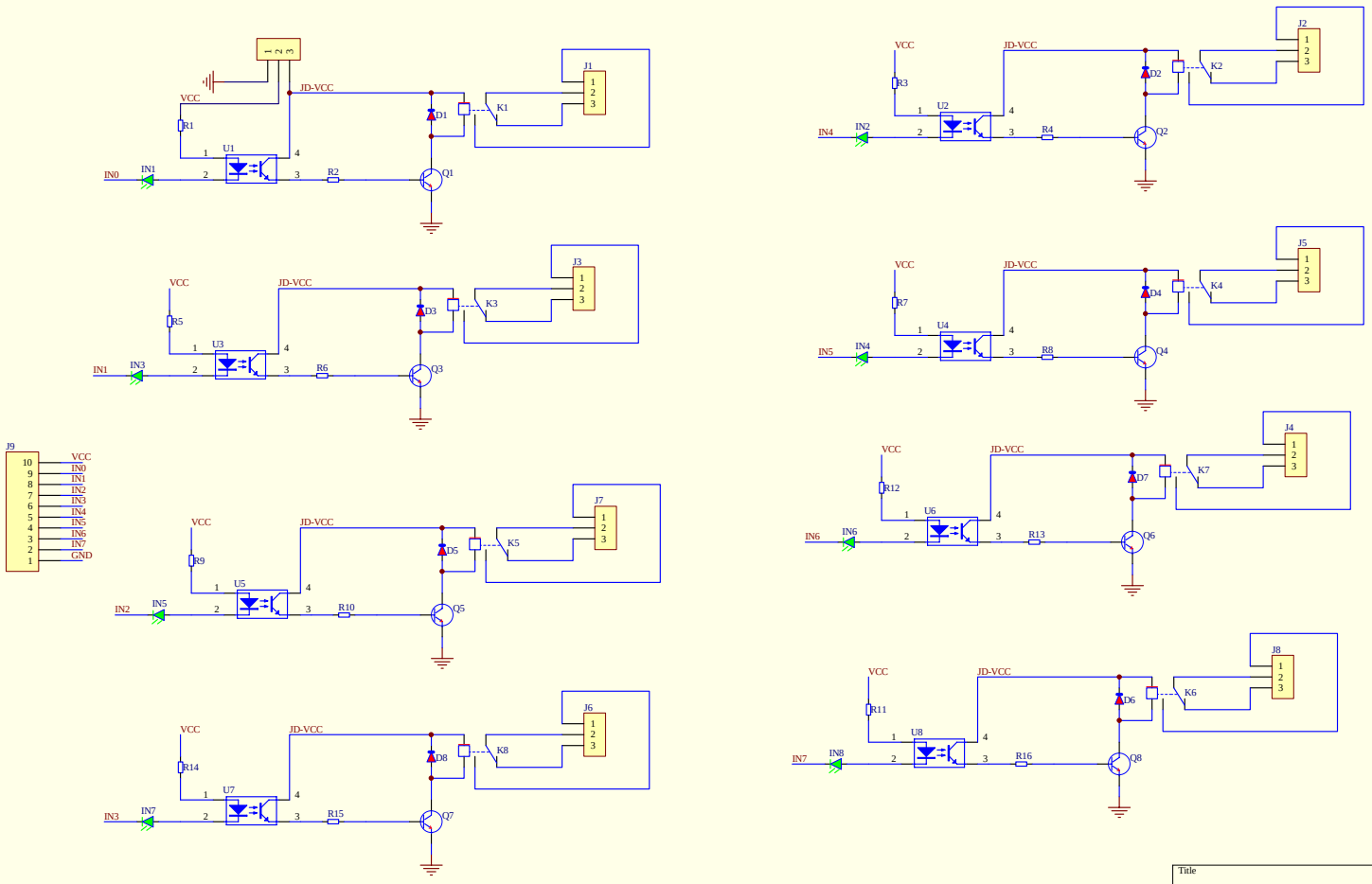

Title		
Size B	Number	Revision
Date: 5-May-2011		Sheet of
File: E:\PCB\jidianqi.Ddb		Drawn By: